THIS COPY IS PROVIDED ON A RESTRICTED BASIS AND IS NOT TO BE USED IN ANY WAY DETRIMENTAL TO THE INTERESTS OF PANDUIT CORP.

Material	High Conductivity Seamless Copper Tube
Plating	Electro-Tin
Wire Size	6 AWG
Wire Type	Stranded Copper; Class B: Compact, Compressed or Concentric, Class C: Concentric
Wire Strip Length	7/8 in.
Stud Size	5/16 in.
UL Listed Wire Connector	Yes, for applications up to 35kv. Consult cable manufacturer for voltage stress relief instructions with applications greater than 2000 volts.
UL Temperature Rating	90° C
C.S.A Certified Wire Connector	Yes
Panduit Color Code on Barrel	BLUE
Panduit Die Index No. on Barrel	P24
Alternate Industry Die Index No. ( ) on Barrel	(7)

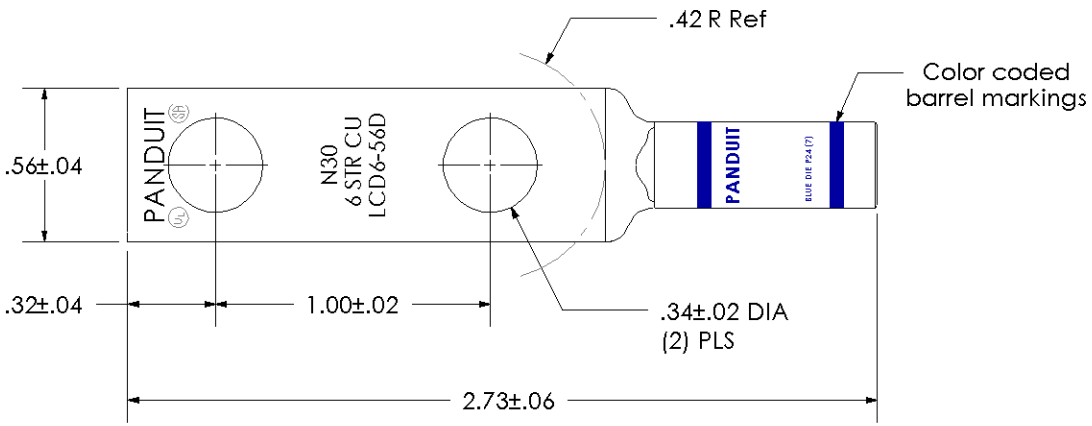

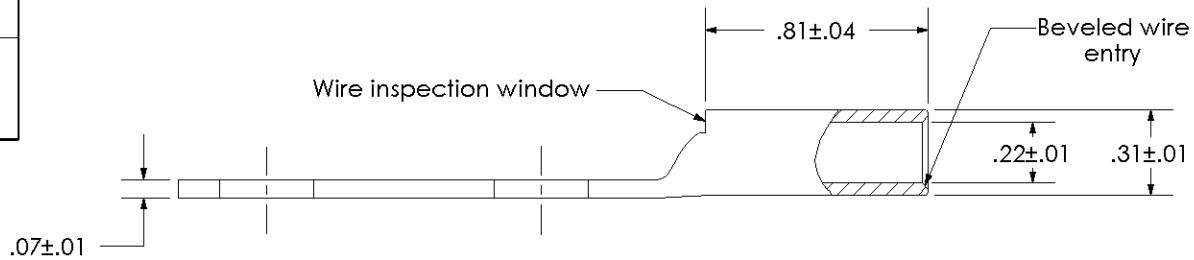

CERTIFIED

LISTED
Wire Connector

REV	DATE	BY	CHK	DESCRIPTION	ECN
00	12/02	SAB	DRL	RELEASED	10343

PANDUIT CORP. TINLEY PARK, ILLINOIS

LCD6-56D-L
Copper Lug - Two-Hole, Standard Barrel

SCALE N/A

DRAWING NO / CAD FILE LCD6-56D-CUST